EN

Mounting and operating manual

PCE

Connection to the future

EV11.3 WALLBOX

Mode 3 Case C

Mounting and operating manual 11227 EV11.3 WALLBOX MOM V1.2 - 11/2025

© PC Electric GesmbH
This document is protected by copyright.

The contents of this document are the property of PC Electric GesmbH and may not be copied or reproduced in whole or in part without the written permission of the copyright holder.

Subject to technical changes and possible printing errors.

Table of contents

1. General information 4
1.1 Using this manual 4
1.2 Target groups 4
1.3 Responsibilities of the customer 4
1.4 Limitation of liability 4
2. Safety information 5
2.1 Types of safety instructions 5
2.2 General safety instructions 5
2.3 Intended use 6
2.4 Reasonably foreseeable misuse 6
3. Conformity 7
3.1 Directives 7
3.2 Standards 7
4. Product overview 8
4.1 Dimensions [mm] 8
4.2 Product labels 9
4.3 Circuit board overview of charging station without energy meter 10
4.4 Circuit board overview of charging station with energy meter 11
5. Technical data 12
5.1 Supply cable connection data without energy meter 13
5.2 Supply cable connection data with energy meter 14
6. Mounting and installation 15
6.1 Selecting a location 15
6.2 Mounting position 16
6.3 Mounting procedure 17
6.4 Commissioning 23
7. Operation 23
7.1 LED status display meaning 24
7.2 Charging a vehicle 24
7.3 Troubleshooting 25
8. Cleaning and service 27
8.1 Cleaning 27
8.2 Service 27
8.3 Replacement parts 27
8.4 Support contact 27
9. Dismounting and disposal 28
10. Scope of delivery 29

1. General information

1.1 Using this manual

These instructions contain the necessary information for the proper mounting, installation and operation of the EV11.3 WALLBOX.
The safety information ensures safe and efficient handling of the charging station in all life cycle phases.
This digital manual is an integral part of the product and must be kept for its entire service life.
Before starting any work, the instructions must be carefully read and understood by all target groups.
The illustrations are intended to provide better understanding and may differ from the product version supplied.

For ease of reading, this mounting and operating manual is referred to "the manual" in the text.

1.2 Target groups

The manual is intended for:

- Installers who have purchased charging stations
- Users who operate charging stations
- Qualified electricians who carry out installation, repair or maintenance work on the charging station

1.3 Responsibilities of the customer

- Provide this manual to your electricians
- Comply with the intended use of the charging station
- Have the charging station mounted and installed by a qualified electrician in accordance with national regulations
- Have periodic tests carried out at regular intervals by a qualified electrician
- Check the charging station for damage before each use
- Before charging, check the charging compatibility of the vehicle to be charged

1.4 Limitation of liability

PC Electric GesmbH cannot accept liability for any damage caused by:

- Failure to comply with this manual
- Any use other than the intended use
- Mounting and commissioning by anyone other than a qualified electrician

2. Safety information

2.1 Types of safety instructions

DANGER

Indicates imminent danger. If not avoided, death or serious injury will result

WARNING

Indicates possible imminent danger. If not avoided, death or serious injury can result

CAUTION

Indicates a possible imminent danger. If not avoided, mild injury can result

NOTE

Note on a possibly harmful situation If not avoided, the equipment or something in the vicinity may be damaged

Denotes important information

2.2 General safety instructions

WARNING

Risk of electric shock from live equipment!

Ensure that the system is de-energised by following the five safety steps before starting any work:

- Disconnect from power
- Secure against restoration of power
- Verify absence of voltage
- Earth and short-circuit
- Cover or block off nearby live parts

WARNING

Risks due to electrostatic discharge!

The electrostatic protection of the charging station is only guaranteed when it is fully assembled. To prevent damage to the function of the charging station:

- Only touch the circuit board in an ESD-safe environment

CAUTION

Risk of stumbling due to the charging cable hanging or lying on the floor!

- Mount the charging station in an easily accessible and well-lit location
- Ensure freedom of movement in the area of the charging station
- Do not block people's paths with the charging cable

NOTE

Do not use any silicone due to product damage

All installation, repair or maintenance work on the charging station must only be carried out by qualified electricians

2.3 Intended use

Charging station is suitable for:

- Charging electrically powered vehicles or plug-in hybrid vehicles
- Indoor or outdoor use in accordance with the defined ambient conditions and limit values in the „Technical data" chapter
- Mounting and operation in accordance with the chapters „Installation" and „Operation"

Any other use is considered improper use.
PC Electric GesmbH is not liable for any resulting damage to people, the environment or possible damage to property

2.4 Reasonably foreseeable misuse

The safety and characteristics of the product may be impaired if it is used outside the specified limits or if it is handled in a manner not permitted in these instructions.
The following is prohibited:

- Unauthorised conversions and modifications to the charging station
- Improper use, e.g. pulling the charging connector on the cable, falling from a great height, throwing etc.
- Use of defective, worn or contaminated charging couplings
- Use of adapters of any kind
- Connection of other devices such as power tools
- Covering the charging station
- Use in potentially explosive atmospheres

Only installation work expressly authorised by PC Electric GesmbH is permitted. Conversions and modifications result in the loss of warranty claims

3. Conformity

3.1 Directives

The charging station complies with the requirements of the following European directives:

- Low Voltage Directive 2014/35/EU
- EMC Directive 2014/30/EU
- RoHS Directive 2011/65/EU

3.2 Standards

The charging station meets the requirements of the following standards:

- EN IEC 61851-1
- IEC 61439-7

EN

4. Product overview

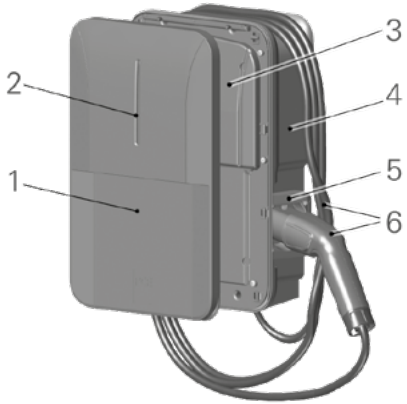

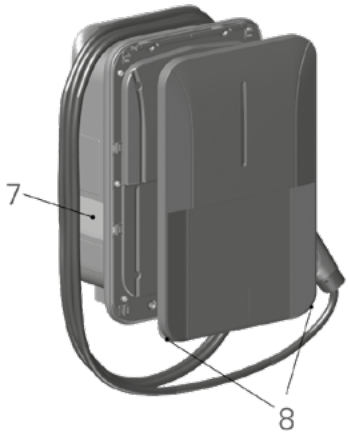

1. Designer-style trim panel
2. LED status display
3. Housing cover
4. Housing bottom part
5. Coupling holder
6. Type 2 vehicle coupling with charging cable
7. Viewing window / Cover window
8. Grip tabs

4.1 Dimensions [mm]

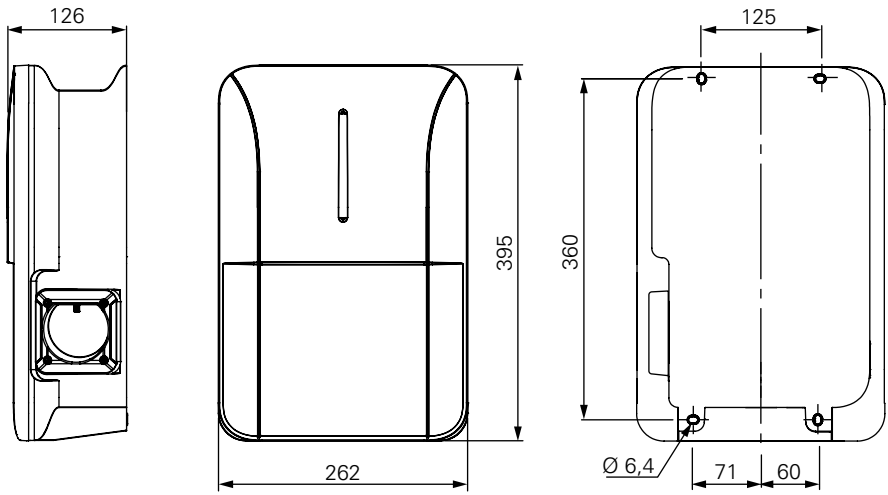

4.2 Product labels

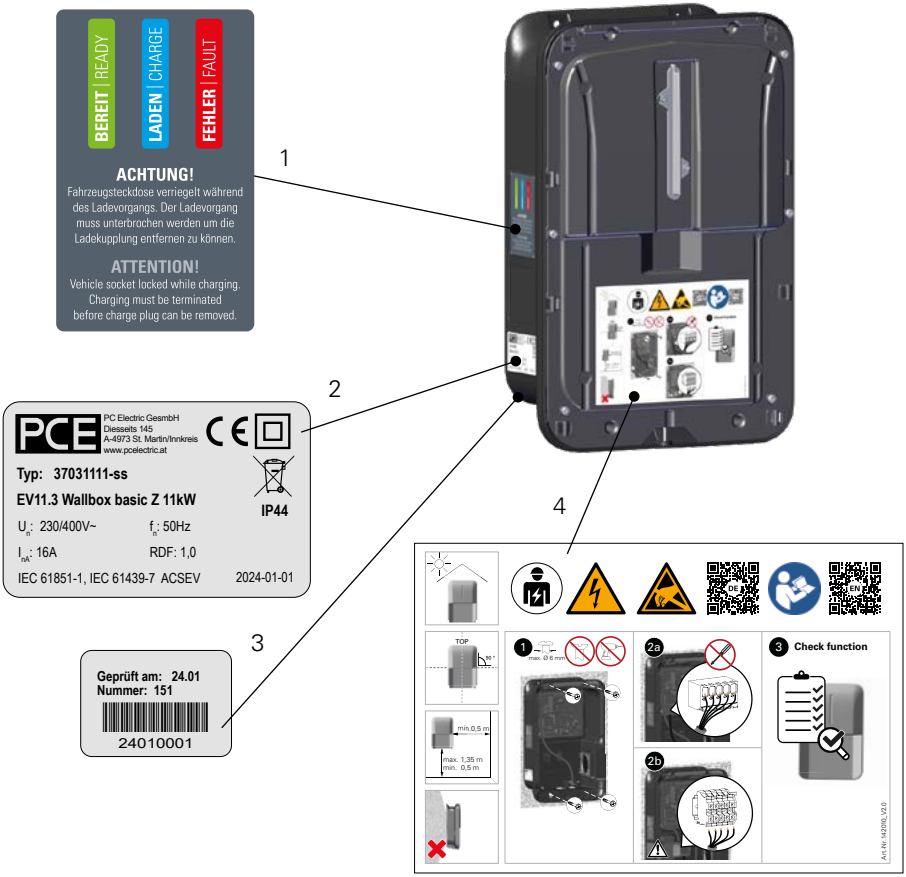

1. LED status display label
2. Type label
3. Serial number
4. Mounting instruction label

The type label is an example illustration only. The correct information can be found on the type label of each individual product.
Z on the type label stands for energy meter

4.3 Circuit board overview of charging station without energy meter

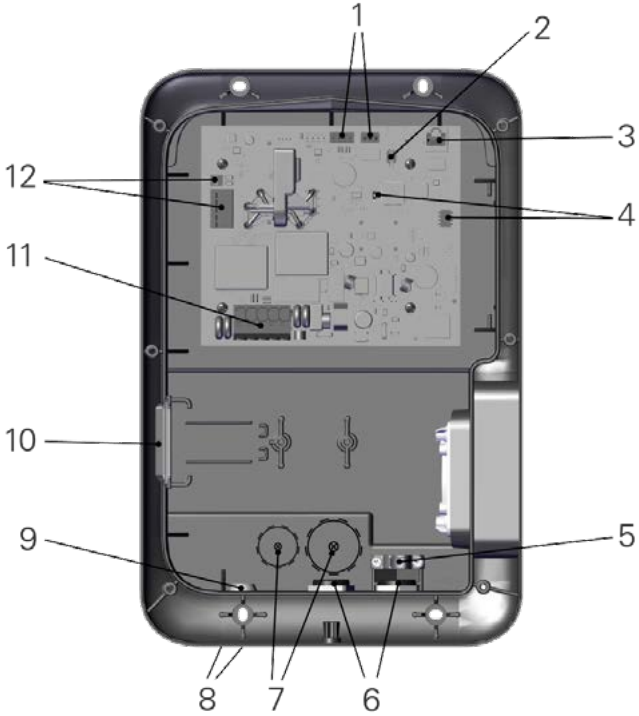

1. Control line (signal input (12 V) and relay signal output (max. 250 V AC 0.5 A))
2. Service connection
3. Ethernet RJ45 data connection
4. "Maximum charging current" DIP switch 4p / "Enable automatic phase switching" DIP switch 1p
5. Tension relief
6. M25 cable gland
7. M16, M32 drilling marks
8. M16, M20 drilling marks
9. M16 double diaphragm support
10. Cover window
11. Mains connecting terminals
12. Charge cable connecting terminals

Circuit board components 1, 3, 4 enable optional function expansion. This requires installation work. Description online:
https://www.pcelectric.at/en/info-media/emobility-manuals.html

4.4 Circuit board overview of charging station with energy meter

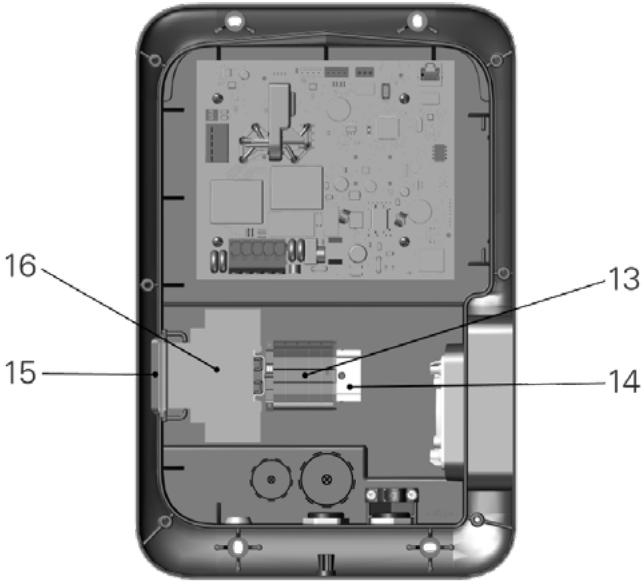

13. Mains connecting terminals
14. Mounting rail
15. Viewing window
16. Energy meter

5. Technical data

Product types	**EV11.3 WALLBOX basic** **EV11.3 WALLBOX basic Z** (Z- energy meter)
Charging coupling	Type 2
Charging mode	Mode 3 Case C (with charging coupling)
Number of charging points	1
Charging power	max. 11 kW (3-phase) or 3,7 kW (single-phase)
Number of phases	Single- or 3-phase
Type of charging current	AC
Rated current I_N	16 A
Rated voltage U_N	230 V / 400 V
Rated frequency f_N	50 Hz
Mains system	TN / TT / IT
Standby power	<2 W
Protection class	II
Over-voltage category	III
EMC classification	B
Ambient temperature during operation (no direct sunlight)	-25 °C bis +40 °C
Storage temperature	-35 °C bis +55 °C
Relative humidity	5% bis 95%
IP protection class	IP44
IK impact resistance	IK08
DC fault current detection*	6 mA RCM module
Housing material	ABS
cable gland (supply)	M25 (Ø 8–17 mm)
Charging cable length/cross-section	5 ... 7,5 m / 5G 2,5 mm² + 1x0,5 mm²
Charging status acc.to EN IEC 61851-1	Charging status C
Height above sea level	Up to 2000 m above sea level
Weight	max. 5 kg

*) Maximum interruption time with sudden occurrence of direct current: 10s at 6mA; 0,3s at 60mA; 0,1s at 200mA
Literature reference: IEC 62955:2018, Residual direct current detecting device (RDC-DD) to be used for mode 3 charging of electric vehicles

Further information (such as chemical resistance or UV resistance) can be found in the PCE product catalogue: https://www.pcelectric.at/shop/en

5.1 Supply cable connection data without energy meter

Connecting terminal for supply	
Manufacturer	WAGO
Model	CAGE CLAMP®

Connection data for supply	
Rated cross-section	6 mm²
Insulation stripping length	11 ... 13 mm
Rigid conductor	1,5 ... 10 mm²
Flexible conductor	1,5 ... 10 mm²
Flexible conductor with wire end ferrule with plastic collar DIN 46228/4	1,5 ... 6 mm²
Flexible conductor with wire end ferrule without plastic collar DIN 46228/1	1,5 ... 6 mm²
Flexible conductor with TWIN wire end ferrule	1,5 ... 2,5 mm²

5.2 Supply cable connection data with energy meter

Connecting terminal for supply	
Manufacturer	Phoenix Contact
Model	UT 6, UT 6 BU, UT 6- PE

Connection data for supply	
Rated cross-section	6 mm²
Insulation stripping length	10 mm
Torque	1,5 ... 1,8 Nm
Feed-through terminal UT 6, UT 6 BU	
Rigid conductor	1,5 ... 10 mm²
Flexible conductor	1,5 ... 10 mm²
Flexible conductor with wire end ferrule with plastic collar DIN 46228/4	1,5 ... 6 mm²
Flexible conductor with wire end ferrule without plastic collar DIN 46228/1	1,5 ... 6 mm²
2 conductors of same cross-section, rigid	1,5 ... 2,5 mm²
2 conductors of same cross-section, flexible	1,5 ... 2,5 mm²
2 conductors of same cross-section, flexible, with TWIN wire end ferrules with plastic collar	1,5 ... 4 mm²
2 conductors of same cross-section, flexible, with wire end ferrule without plastic collar	1,5 mm²
Protective conductor terminal block UT 6 - PE	
Rigid conductor	1,5 ... 16 mm²
Flexible conductor	1,5 ... 10 mm²
Flexible conductor with wire end ferrule with plastic collar DIN 46228/4	1,5 ... 6 mm²
Flexible conductor with wire end ferrule without plastic collar DIN 46228/1	1,5 ... 16 mm²

On-site protection of the supply cable	
GFCI	• Type A IΔN ≤ 30mA • Type EV • Type B
Circuit breaker	max. type B16 or C16

6. Mounting and installation

6.1 Selecting a location

The following environmental conditions must be observed when selecting a location:

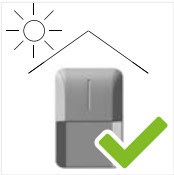

Mount the charging station in an area protected from direct sunlight

Do not mount the charging station in the vicinity of flammable or explosive substances

Do not mount the charging station in locations with direct water jets (such as high-pressure cleaners, car washes etc.)

Do not mount the charging station in areas at risk of flooding

Do not mount the charging station in escape routes or pedestrian passages

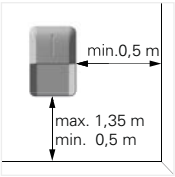

The lowest point of the vehicle coupling in the rest position must be between 0.5 m and 1.35 m above the ground

6.2 Mounting position

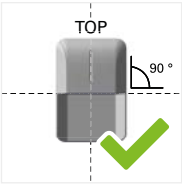

Mount the charging station vertically on a vertical, flat wall or on a suitable pillar

Do not mount the charging station in a horizontal position

Do not mount the charging station on an inclined surface

Do not mount the charging station upside down

Mount the charging station on a level and stable surface (such as a brick or concrete wall)

Only mount the charging station in a vibration-free environment

6.3 Mounting procedure

- Check the charging station for damage after unpacking
- Use suitable tools and screws for the specific wall characteristics
- Do not deform or damage components during installation

WARNING

Risk of short circuit due to improper installation!

- Observe the specified stripping length
- Verify the characteristics of the supply cable
- Observe the specified torques

CAUTION

Risk of stumbling due to the charging cable hanging or lying on the floor!

- Mount the charging station in an easily accessible and well-lit location
- Ensure freedom of movement in the area of the charging station
- Do not block paths with the charging cable

1. Prepare drill holes

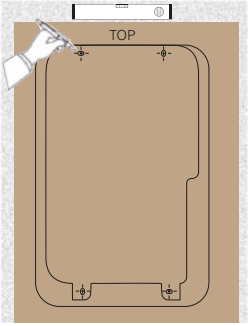

- Place the drilling template on the wall
- Position exactly vertically using a spirit level
- Mark the drill holes
- Drill the holes at the marked points using an electric drill

2. Remove the housing cover from the lower part of the housing

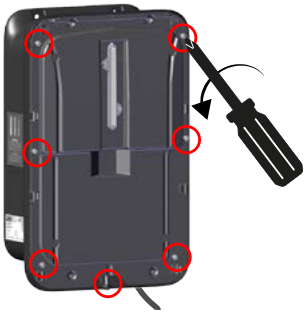

- Unscrew 7 screws
- Remove housing cover

3. Mount lower part of housing on the wall

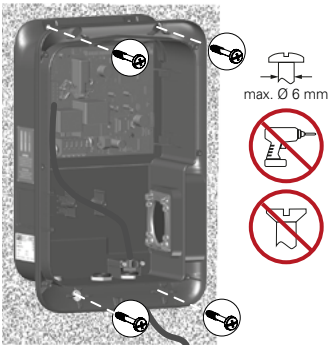

- Fasten lower part of housing with 4 suitable screws

4. Prepare supply cable

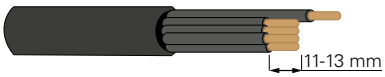

EV11.3 WALLBOX without energy meter
Connecting terminal

- Strip insulation from 11–13 mm of the conductor
- Use wire end ferrule as required according to the technical data

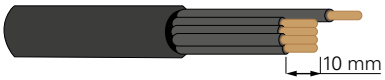

EV11.3 WALLBOX with energy meter
Connecting terminal

- Strip insulation from 10 mm of the conductor
- Use wire end ferrule as required according to the technical data

Prepare M25 cable gland (only for cable diameter 11–17 mm)

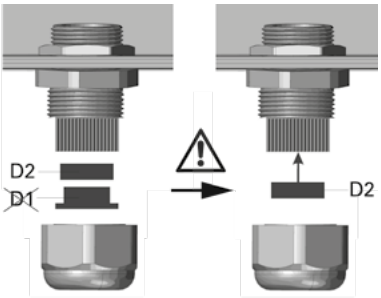

- Loosen cap nut
- Remove the sealing rings from the inside of the cable gland
- Remove and dispose of sealing ring D1
- Insert sealing ring D2 back into the cable gland

Insert supply cable

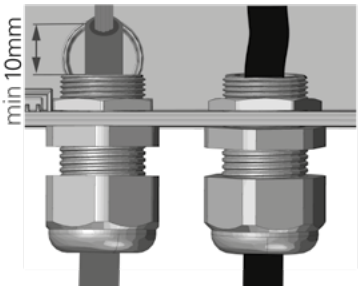

- Insert supply cable
- Tighten cap nut

SW25

500 Ncm

5. Connect the supply cable to electricity – EV11.3 WALLBOX without energy meter

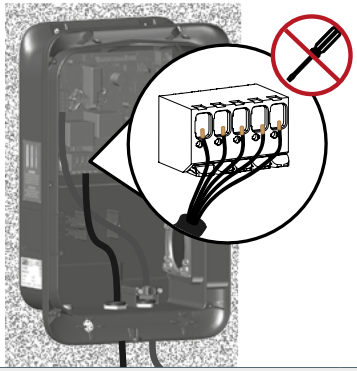

- Connect the supply cable to terminals
  5p = L1, L2, L3, N, PE
  (3p = L1, N, PE)
  according to the labelling

1. Open lever
2. Insert cable
3. Close lever

Connect the supply cable to electricity – EV11.3 WALLBOX with energy meter

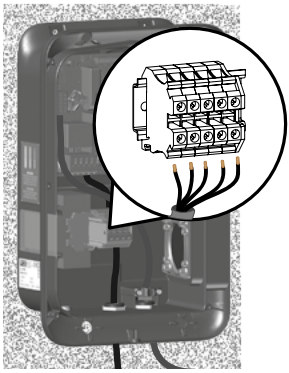

- Connect the supply cable to terminals
  5p = L1, L2, L3, N, PE
  (3p = L1, N, PE)
  according to the labelling

1,5 - 1,8 Ncm

Set „Maximum charging current“ DIP switch (8* – factory setting)							
Setting	Charging current	Charging power		Dip-Switch position 0 – left 1 – right			
Option	Set value	1-phase	3-phase	dip 1	dip 2	dip 3	dip 4
1	6A	1,4 kW	4,1 kW	1	0	0	0
2	7A	1,6 kW	4,9 kW	1	0	0	1
3	8A	1,8 kW	5,5 kW	1	0	1	0
4	9A	2,0 kW	6,2 kW	1	0	1	1
5	10A	2,3 kW	6,9 kW	1	1	0	0
6	12A	2,8 kW	8,3 kW	1	1	0	1
7	13A	3,0 kW	9,0 kW	1	1	1	0
8*	**16A**	**3,7 kW**	**11,0 kW**	**1**	**1**	**1**	**1**

The „Plug in and charge“ operating mode is possible without any further configuration. Simply plug the charging coupling into the vehicle charging socket and the charging process starts automatically. The charging power of the charging station corresponds to the dip-switch setting „Maximum charging current“

Factory setting: Dip-Switch „Maximum charging current“ = 16A

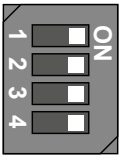

Additional configuration work is required for other operating modes (communication via digital signals or a data connection via Modbus tcp). The instructions are available via QR code or alternatively on the homepage:
https://www.pcelectric.at/en/info-media/emobility-manuals.html

6. Testing the installation – check list

Circuit breaker	✔ Ensure max. type B16 or C16
GFCI	✔ Type A IΔN ≤ 30mA or Type EV or Type B
Circuit board	✔ Visually check for damage
Cable gland	✔ Check for firm seating
Interior of housing	✔ Check for contamination and moisture
Connection of supply	✔ Check connection terminals L3, L2, L1, N, PE for correct wiring and tight fit

7. Mount housing cover

- Check the sealing gap for foreign objects
- Secure the housing cover with the 6 screws provided

8. Mount designer-style trim panel

- Attach the trim panel to the top centre of the housing cover

- Snap trim panel onto housing cover

- Fasten trim panel using the screw provided

PH2

60 Ncm

Note on dismantling designer-style trim panel

1. Remove trim panel screw
2. Pull on grip tabs of trim panel

9. Mounting complete

- Coil charging cable around the housing
- Insert charging coupling into the coupling holder

6.4 Commissioning

CAUTION

Risk of electric shock from live charging station!

- Do not remove housing parts when the charging station is live

- Switch on circuit breaker-> LED status indicator pulses green
- Check the individual functions using an approved test adapter

Fig.: Example of test adapter

Measuring devices must comply with national regulations

7. Operation

WARNING

Risk due to improper operation!

- Only use the charging station if it is in perfect condition. Take charging station out of operation immediately if damaged
- Take charging coupling out of operation immediately if contacts are contaminated or corroded
- Do not remove product labels from the charging station
- Use in accordance with the intended use and the technical data

NOTE

To avoid property damage:

- Pull the charging cable out of the vehicle charging socket by grasping the charging coupling and not the charging cable
- Protect the charging cable from mechanical damage (do not kink, crush, run over etc.)
- Protect the contacts of the charging coupling from heat sources, dirt and moisture
- Insert charging coupling into the coupling holder when not in use

7.1 LED status display meaning

The charging station has an LED status display that shows the current status of the charging station.

Avoid direct visual contact with the illuminated LED

	LED status display	Meaning
	LED pulsing green	Charging station ready to operate
	LED steady blue	Charging in progress
	LED steady red	Charging station out of order
	LED flashing red	Fault
	LED does not light	No power

7.2 Charging a vehicle

Before charging, ensure that the LED status display is pulsing green

Starting the charging process

1. Remove charging coupling from the coupling holder
2. Unwind the charging cable from the charging station
3. Connect the charging coupling to the vehicle

   Check that charging cable is not under tension and does not block the path of other road users

4. Vehicle locks charging coupling
5. Charging starts automatically – LED lights up blue

Ending the charging process

When the desired charge level is reached, end the charging process according to the vehicle's user manual.

Charging process complete

1. Vehicle fully charged – Charging process completed – Charging coupling unlocked by vehicle – LED status indicator pulsing green
2. Disconnect charging cable from the vehicle
3. Wind charging cable around the charging station
4. Insert charging coupling into the coupling holder

NOTE

If the power supply is interrupted, the charging coupling will not automatically unlock. The interlock must be unlocked in accordance with the vehicle's user manual

The charging station does not have its own power switch.
The circuit breaker of the supply line serves as a mains isolating device.

7.3 Troubleshooting

LED status display	Meaning	Cause / correction
LED flashing red 1x	Fault	• Charging request with ventilation is not supported – no charging process possible
LED flashing red 2x	Fault	• DC residual current triggered – check charging cable and vehicle • Restart the charging process – to do this, properly disconnect the charging connector from the vehicle and reconnect it
LED flashing red 3x	Fault	• Communication problems between charging station and vehicle – check charging cable and vehicle • Restart the charging process – to do this, properly disconnect the charging connector from the vehicle and reconnect it
LED flashing red 4x	Charging process paused	• Overheating – charging process will restart automatically after cooling down

LED steady red	Fault	• Internal error – briefly disconnect the charging station from the power supply. If the problem persists after switching on – contact a qualified electrician
LED does not light	No status display	• Check the GFCI and circuit breaker • Check power supply • Charging station does not work – contact qualified electrician

LED lights up green and 3x blue every 10 sec	Charging process paused	• Release not received from vehicle or charging process ended by vehicle – Check vehicle
LED lights up green and 1x blue every 10 sec	Charging process paused	• Release not received from Modbus TCP – check higher-level controller
LED lights up green and 2x blue every 10 sec	Charging process paused	• Release not received from digital or PWM signal – check higher-level controller or energy meter
LED lights up green and 1x yellow every 10 sec	Charging power reduced	• Check higher-level controller of Modbus TCP
LED lights up green and 2x yellow every 10 sec	Charging power reduced	• Check higher-level controller of digital, PWM signal or energy meter
LED lights up green and 4x red every 10 sec	Charging power reduced	• Overheating – full charging power available again after cooling down

8. Cleaning and service

8.1 Cleaning

Before cleaning the charging station:

- End charging process
- Disconnect the charging cable from the vehicle and insert the charging coupling into the coupling holder
- Wipe the charging station with a damp cloth

NOTE

Damage to the charging station due to improper cleaning!

- Check cleaning agents for compatibility
- Do not clean the charging station with a water jet or steam jet cleaner

8.2 Service

The charging station must be checked regularly by the installer/user.

Component	Type of check	Who	Service interval
Housing Charging coupling Charging cable	Visual inspection for damage, wear and contamination	Installer / user	Before every use

NOTE

All maintenance and repair work on the charging station must only be carried out by qualified electricians

8.3 Replacement parts

Only original spare parts are permitted.

8.4 Support contact

PC Electric GesmbH
Diesseits 145
4973 St. Martin im Innkreis
Email: support.emobility@pcelectric.at

9. Dismounting and disposal

WARNING

Risk of injury due to improper decommissioning and dismounting!

Carry out the following safety steps before starting any work:

- Disconnect from power
- Secure against restoration of power
- Verify absence of voltage
- Earth and short-circuit
- Cover or block off nearby live parts

The charging station must be disposed of properly in accordance with the country specific regulations of the country of use.
The materials are recyclable according to their marking.

10. Scope of delivery

1x Charging station with charging cable and type 2 vehicle coupling

1x Designer-style trim panel

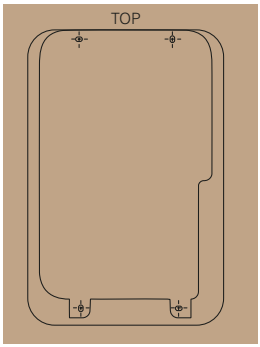

1x Drilling template

PCE

Connection
to the future

www.pcelectric.at

PC Electric GesmbH
Diesseits 145
4973 St. Martin im Innkreis
AUSTRIA
TEL +43 7751 61220
FAX +43 7751 6969
office@pcelectric.at

Art.Nr. 11227