article#	**9473070**
article description	**Distribution box rubber mobile RIED BV 2x16/5 4xSSD 2m5G2.5St16 Ea IP54**
description long	mobile solid rubber distribution box model RIED IP54 285x235x281 2m cable H07RN-F 5G2,5mm2 black with plug 16A 5p 400V 2xCEE-sockets 16A 5p 400V protected with pre-fuse of supply line 4xSK-sockets 16A 250V IP54 fused with 2xMCB`s 16A 1p C 1xRCD 40A/4/0.03A (TYP A 25AT) over all outlets MCB`s and RCD are Eaton ÖVE / VDE branded distribution box is ready wired for using
GTIN (EAN)	9003399764561
country of origin	AT
customs number	85371098
net weight	5.900 kg
packaging quantitiy	1
minimum order quantitiy	1

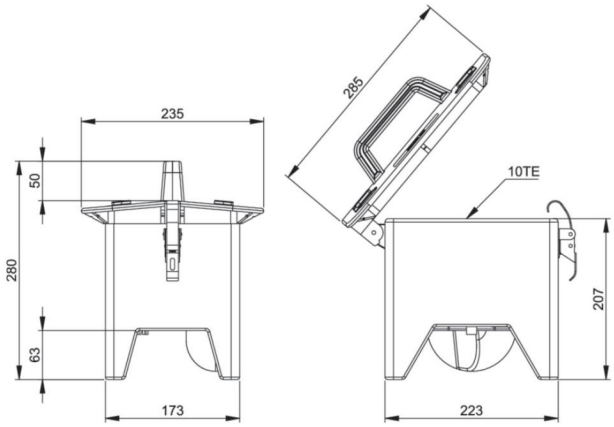

ETIM 9.0	EC000379
CEE socket outlet 16 A	2x16A5p400V
Number of socket outlets with protective contact CEE 7/3 (type F)	4
Protection	Overcurrent switch
Earth leakage switch	Earth leakage switch with IFN 30 mA (standard)
Number of miniature circuit breakers	5
Material housing	Rubber
Power supply/connection possibility	Feeder cable with plug
Type of mains connection	CEE 16 A
Cable length	2 m
Handling	Portable
Degree of protection (IP)	IP54
Colour	Black
Height	3 mm
Width	235 mm
Depth	281 mm

https://www.pcelectric.at/shop/en/?func=detail&artnr=9473070

Changes and printing errors reserved!

8/9/2024