Connection to the future

| | |
|---|---|
| article# | **9473377** |
| article description | **Distribution box rubber mobile RIED BV 32/5 2x16/5 3xSSD WGS32/5 Ea IP44** |
| description long | Mobile solid rubber distribution box series RIED IP44 285x235x281<br>1xCEE-wall plug 32A 5p 400V<br>1xCEE-socket 32A 5p 400V unprotected<br>2xCEE-socket 16A 5p 400V protected with 1xMCB 16A 3p C<br>3x saftey socket DIN49440 16A 250V IP54 protected with 3xMCBs 16A 1p C<br>1xRCD 63A/4/0.03A (TYP A 40AT) over all outlets<br>distribution box is ready wired for using |
| GTIN (EAN) | 9003399768965 |
| country of origin | AT |
| customs number | 85371098 |
| net weight | 6.300 kg |
| packaging quantitiy | 1 |
| minimum order quantitiy | 1 |

| | |
|---|---|
| ETIM 9.0 | EC000379 |
| CEE socket outlet 16 A | 2x16A5p400V |
| CEE socket outlet 32 A | 1x32A5p400V |
| Number of socket outlets with protective contact CEE 7/3 (type F) | 3 |
| Protection | Overcurrent switch |
| Earth leakage switch | Earth leakage switch with IFN 30 mA (standard) |
| Number of miniature circuit breakers | 4 |
| Material housing | Rubber |
| Power supply/connection possibility | Built-up plug |
| Type of mains connection | CEE 32 A |
| Handling | Portable |
| Degree of protection (IP) | IP54 |
| Colour | Black |
| Height | 280 mm |
| Width | 235 mm |
| Depth | 3 mm |

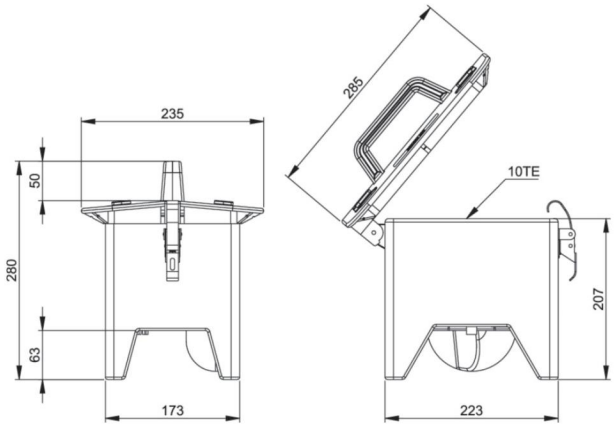


https://www.pcelectric.at/shop/en/?func=detail&artnr=9473377

Changes and printing errors reserved!

8/9/2024